Application Note

Using the digital I/O interface

SM-Series Modules

Overview

The operation of an SM-Series module is remotely controlled through two interfaces. In order to simplify the task of the user, a module is controlled using simple commands such as DC-voltages and single digital lines. Despite high-pin count connectors, this choice to provide a straightforward interface should be time-efficient during rapid prototyping phases.

This application note reports several ways to control an SM-Series module over its digital interface.

Important notice

Document revision history

Release	Comments
SM-SN01-R15A	first release

Typical digital input

A typical digital input of an SM-Series module can be seen in Fig.1. The input is buffered using a CMOS Schmitt inverter whose input is tied to the +5 V power rail through a 100-kΩ resistor. The input series resistor provides current limitation if overvoltages are encountered and slows-down fast logic edges to minimize EMI/RFI problems.

Digital input control using switches

For example, let us consider some controls of a laser frequency stabilization using the SMB20 compensator module. The servo loop operation is toggled between on and off using the lock-mode switch. Thus, when the loop is open, the PID error input is grounded and the servo output disabled. During closed-loop operation, the integrator-mode switch selects the DC-gain of the integrator between low and high values. When lock-acquisition is enabled, the integrator operates in high-gain mode and the tracking input voltage is enabled.

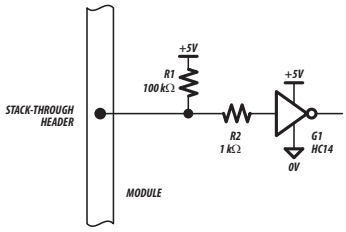

Figure 1: Typical digital input of SM-Series modules.

Each digital input on the compensator can be described using a boolean equation

$$\begin{aligned} /\mathrm{ERR} &= /\mathrm{LOCK} \\ /\mathrm{SERVO} &= /\mathrm{LOCK} \\ /\mathrm{TRK} &= /\mathrm{ACQ} \\ /\mathrm{INT} &= /\mathrm{ACQ} + /\mathrm{HIGAIN} \end{aligned}$$

where the / symbol denotes logical negation. The implementation of these equations is given in Fig.2 where the (optional) 100-nF capacitors provide switch-debouncing. In this circuit, AND-wired diodes are used to prevent unwanted short-circuits in case of a line connected to another switch elsewhere. For this reason, even though the diode is not required for a single line control, it is a good practice to use one.

Digital input control using the SMZ-120 module

The SMZ-120 module allows the user to connect efficiently front panel switches as described previously. Up to 11 switches are provided to access all digital inputs using AND-wired diodes as depicted in Fig.3. The SMZ120 module is ideal to implement simple front panel controls during prototyping phases.

Digital input control using a data acquisition card (DAQ)

When the number of digital controls is low (1 to 5), the simplest way to connect a DAQ signal to an SM-Series digital input is to wire directly the block terminal to the header as shown in Fig.4. The bloc terminals are connected to the digital bus using small jumper wires. When a lot of digital controls are required, a specific module should be used instead. Thus, a specific terminal connector could be mounted on front panel while the connections are laid-out on printed circuit board. Another solution is to use the SMZ110 BNC interface module.

Digital input control using the SMZ110 module

The SMZ110 BNC interface module allows the user to connect a digital signal to a front panel BNC. With up to 5 BNCs available on front panel, every I/O of the digital interface can be accessed using small jumpers wired on printed circuit board. In addition, component footprints are provided to implement EMI/RFI passive filters. Figure 5 shows an example of digital control using an SMZ110. If more than 5 BNCs are required, several SMZ110 boards can be stacked. Because of its flexibility, both analog and digital I/O can be wired on the same SMZ110.

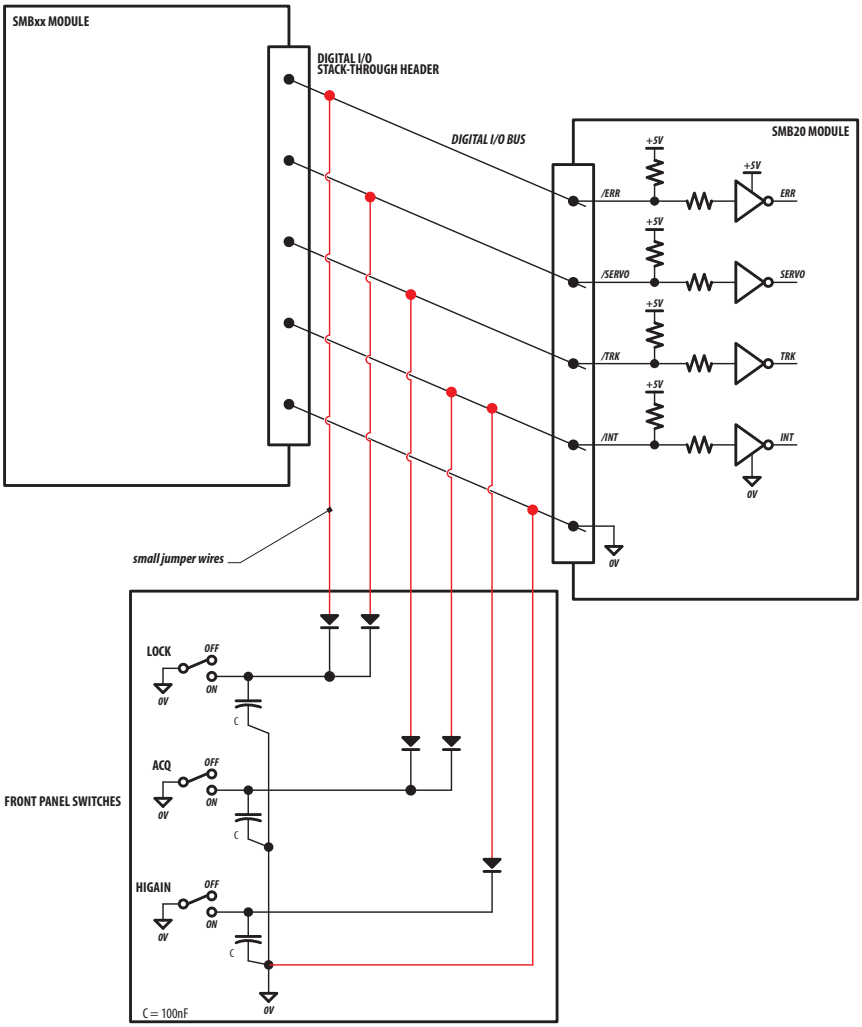

Figure 2: Example of digital control using front panel switches.

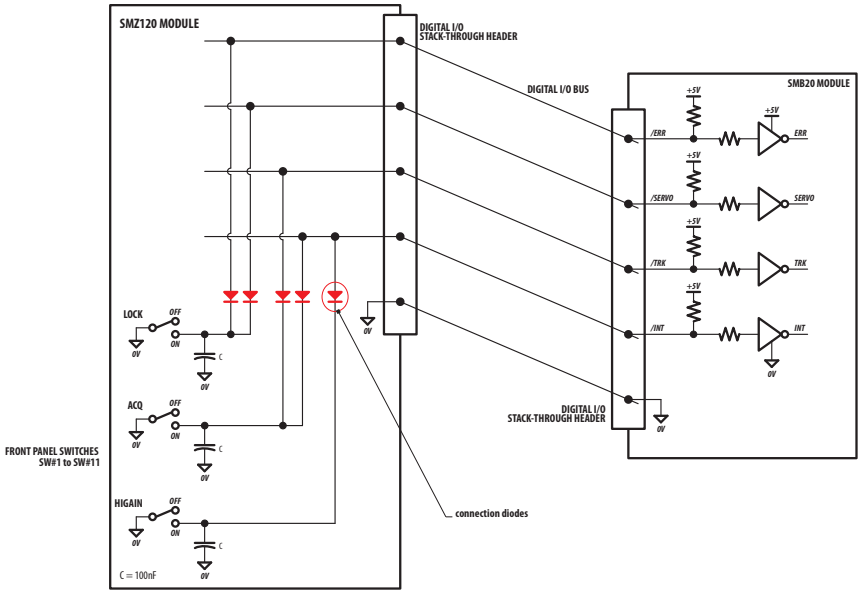

Figure 3: Example of digital control using the SMZ120 module.

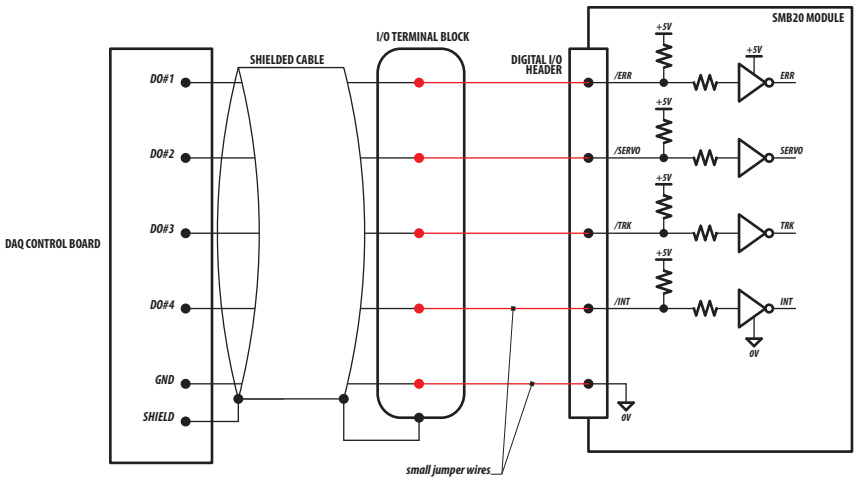

Figure 4: Example of DAQ connections for digital control.

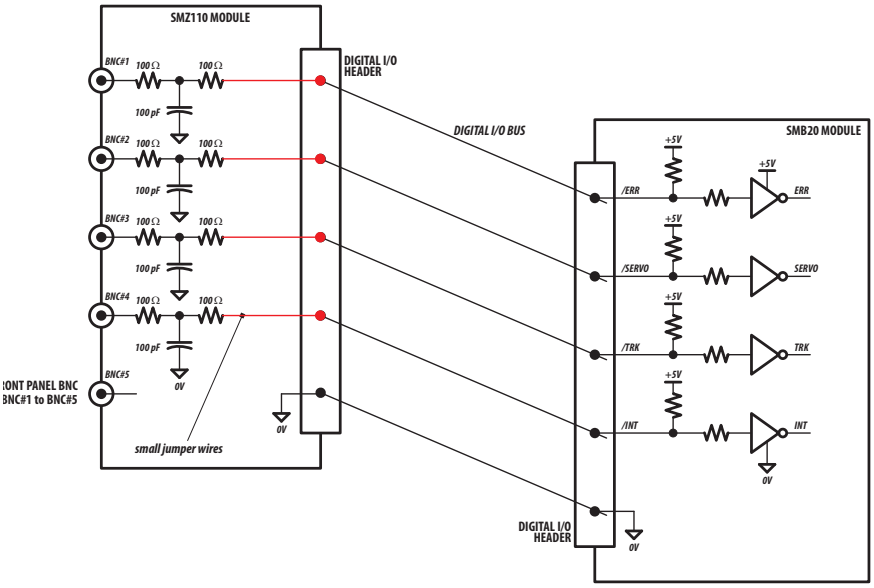

Figure 5: Using the SMZ110 BNCs as digital control connectors.